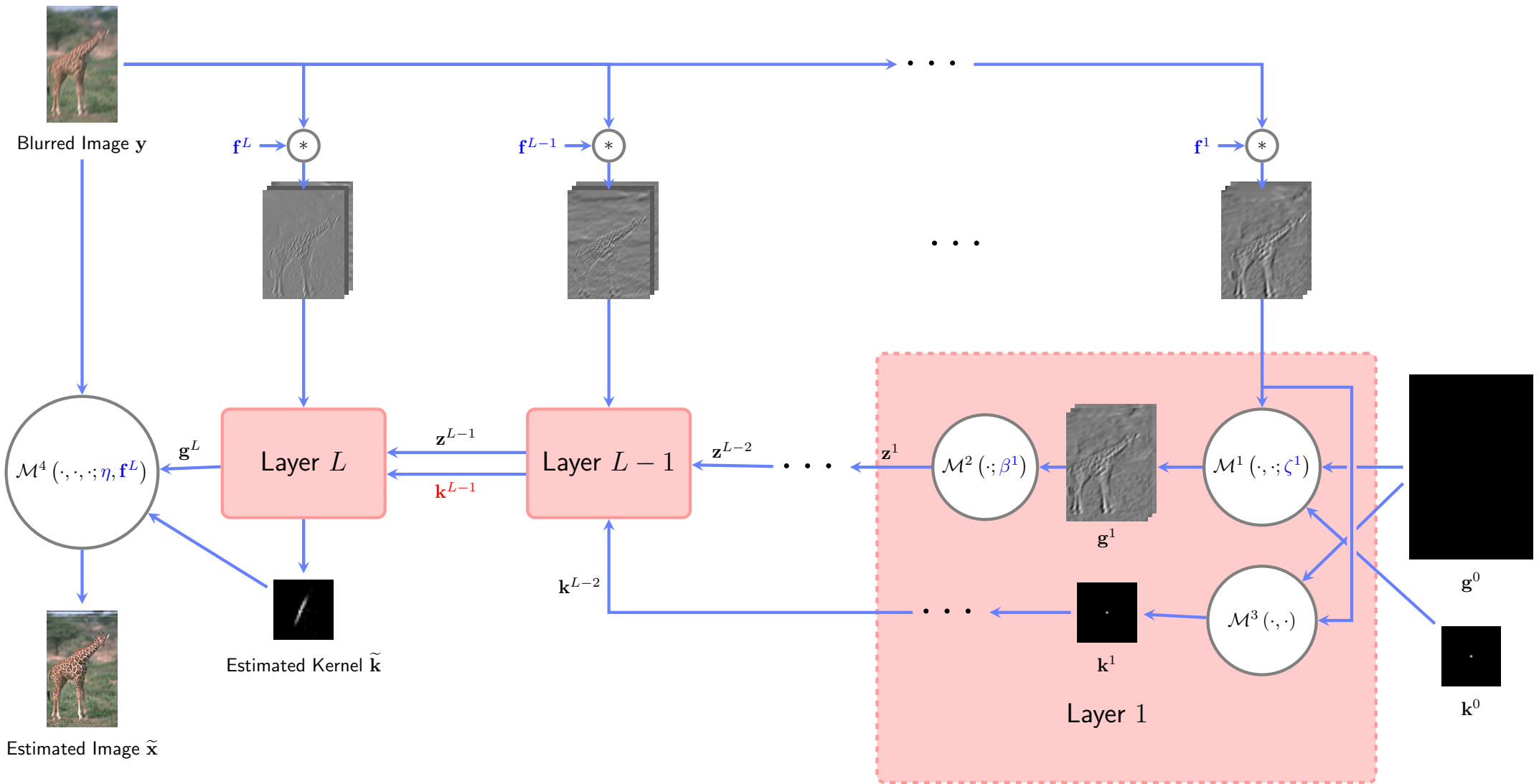
Blurred Image $\mathbf{y}$
$\mathbf{f}^L$
$\mathbf{f}^{L-1}$
$\mathbf{f}^1$
$\mathcal{M}^4(\cdot,\cdot,\cdot;\eta,\mathbf{f}^L)$
$\mathbf{g}^L$
Layer L
$\mathbf{z}^{L-1}$
$\mathbf{k}^{L-1}$
Layer $L-1$
$\mathbf{z}^{L-2}$
$\mathbf{z}^1$
$\mathcal{M}^2(\cdot;\beta^1)$
$\mathbf{g}^1$
$\mathcal{M}^1(\cdot,\cdot;\zeta^1)$
$\mathbf{g}^0$
$\mathbf{k}^{L-2}$
$\mathcal{M}^3(\cdot,\cdot)$
$\mathbf{k}^1$
$\mathbf{k}^0$
Layer 1
Estimated Kernel $\widetilde{\mathbf{k}}$
Estimated Image $\widetilde{\mathbf{x}}$