Model No. DHP485 CORDLESS HAMMER DRIVER DRILL

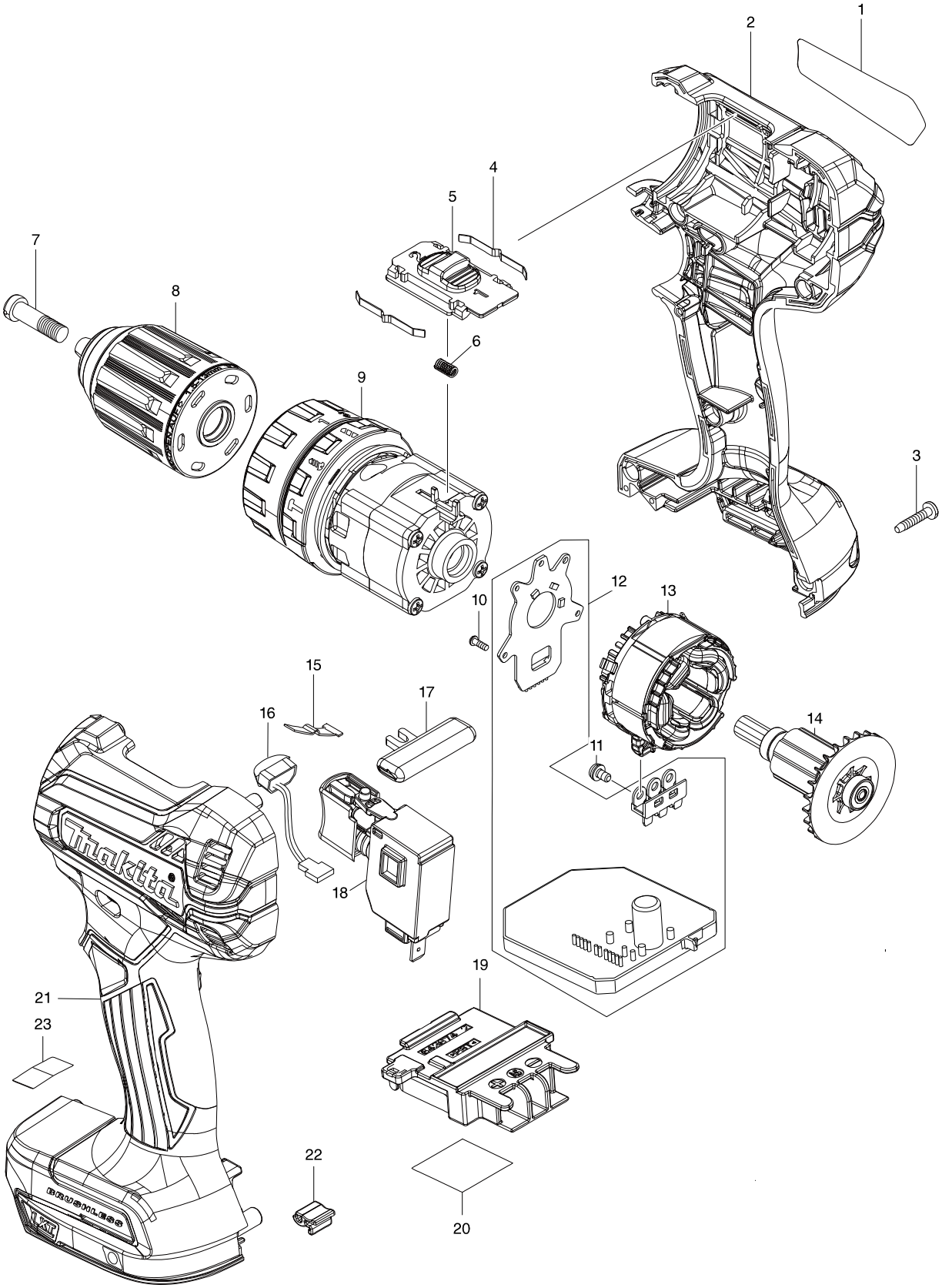

Model No. DHP485 CORDLESS HAMMER DRIVER DRILL

Item	Parts No.	Description	I/C	QTY	N/O	Opt. 1	Opt. 2	NOTE
001	854U05-6	DHP485 NAME PLATE		1				
002	183K32-9	HOUSING SET		1		84679900		
C10	263005-3	RUBBER PIN 6		2		40169390		
C20	252126-6	HEX. LOCKING NUT M4-7		2		73181500		
D10		INC. 21						
003	266429-2	TAPPING SCREW 3X16		8		73181500		
004	232220-0	LEAF SPRING		2		73209090		
005	458671-1	SPEED CHANGE LEVER		1		84679900		
006	233438-6	COMPRESSION SPRING 4		1		73209090		
007	251468-5	- FLAT HEAD SCREW M6X22		1		73181500		
008	766027-7	KEYLESS DRILL CHUCK 13		1				
009	126961-7	GEAR ASSEMBLY		1		84834000		
010	266490-9	TAPPING SCREW PT 2X6		3		73181500		
011	652069-6	FLAT HEAD SCREW M3X6		3		73181500		
012	620964-8	CONTROLLER		1		84679900		
013	629372-0	STATOR		1		84679900		
014	619533-0	ROTOR		1		84679900		
015	232182-2	LEAF SPRING		1		73209090		
016	620549-0	LED CIRCUIT		1		84679900		
017	419041-9	F/R CHANGE LEVER		1		73182990		
018	650710-5	SWITCH C3JW-4B		1		85365090		
019	643874-2	TERMINAL		1		73182990		
020	854U11-1	DHP485 SERIAL NO. LABEL		1				
021	183K32-9	HOUSING SET		1		84679900		
C10	263005-3	RUBBER PIN 6		2		40169390		
C20	252126-6	HEX. LOCKING NUT M4-7		2		73181500		
D10		INC. 2						
022	424517-3	CUSHION		1		84679900		
A01	251314-2	+ SCREW M4X12		1		73181500		
A02	346317-0	HOOK		1		73182990		
A03	784637-8	+- BIT 2-45		1		82075000		
A04B	158597-4	PLASTIC CASE COMPLETE		1		39269099		
C10	417724-5	LATCH		2		73182990		
A05B	450128-8	BATTERY COVER		1		39269099		
A06B	***DC18RC	DC18RC FAST CHARGER		1				
D10		COMPO-PARTS						
A07B	197605-6	BATTERY BL1830B SET		2		85076000		

Please order the parts with a part number.

Print Date 25/11/2019