CLJ 4500 Paper Jams & Troubleshooting

13.2 Jam in fusing area
1 Check fuser asembly
2 Check output asmbly
3 Check duplexer

13.1 Jam in fusing area
1 Check fuser asembly
2 Check output asmbly
3 Check duplexer

13.1 PAPER JAM
OPEN MIDDLE FRONT DRAWER
alternates with
CHECK IN REAR OF DRAWER
1 Check middle front drawer
2 Check/pull fuser

13.3 Jam in duplex reverse unit
Inspect rear of duplexer
and duplexer tray

13.4 Jam in duplex unit
Inspect rear of duplexer
and duplexer tray

13.5 Jam in duplex paper feed area
Inspect rear of duplexer
and duplexer tray

13.6 Jam in duplex paper feed area
Inspect rear of duplexer
and duplexer tray

13.7 Jam in paper feed area
Check entire paper path

13.8 Door open jam
Check rear door, duplexer
cover and rear output door

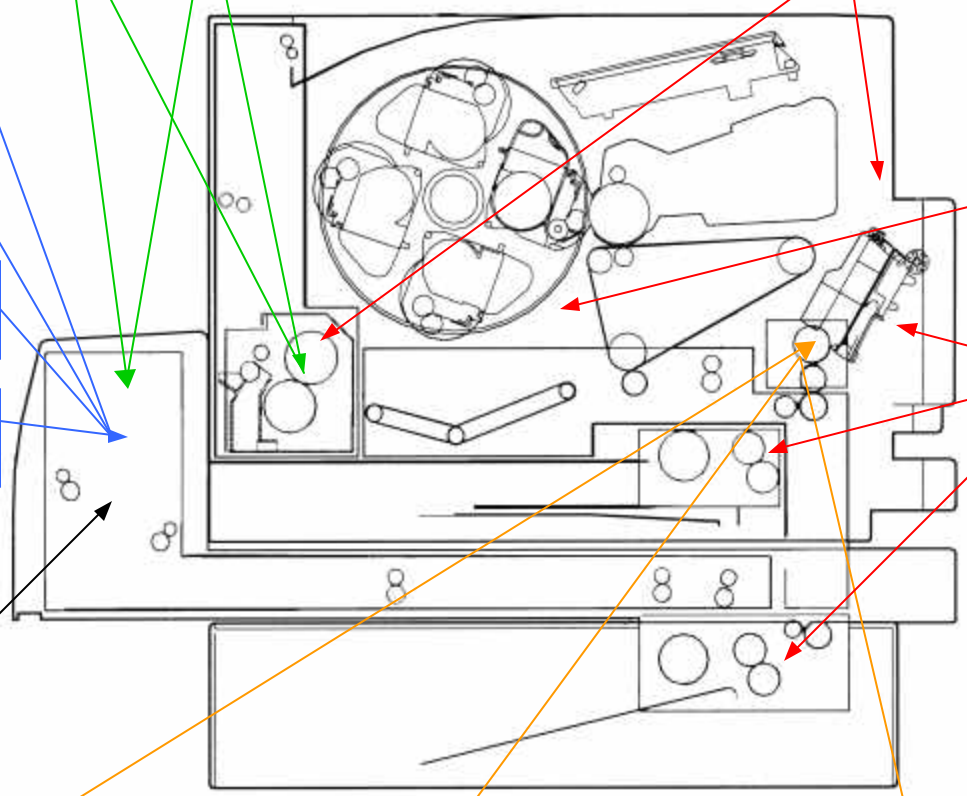

13.1 PAPER JAM
CHECK IN REAR OF DRAWER
1 Check far back in middle front drawer
2 Reseat transfer roller

13.0 Jam in input feed area
Check input trays and duplexer

Alternating Messages:

CHECK MIDDLE FRONT DOORS
1Check middle front drawer
2 Watch pick roller to ensure it is turning

CHECK ALL REAR DOOR
1 Check duplex cover
2 Check upper rear door and rear output door

CHECK FRONT DUPLEX DRAWER
Check front duplex drawer

13.9 Irregular paper jam in paper path
1 Check MP tray area
2 Check entire paper path

13.10 Paper in the paper path is too short
1 Check MP tray area
2 Check entire paper path

13.11 Paper in the paper path is too long
1 Check MP tray area
2 Check entire paper path

Marty Dixon 28 APR 99