WS Steel Wall Sleeves

STEEL WALL SLEEVE SUBMITTAL SHEET

WS Wall Sleeves are constructed from steel and available in a wide range of diameters and lengths.
They are an excellent choice for installations where the Link-Seal® Modular Seal and WS sleeve assembly would be subject to extremely high temperatures or where fire seals are specified.

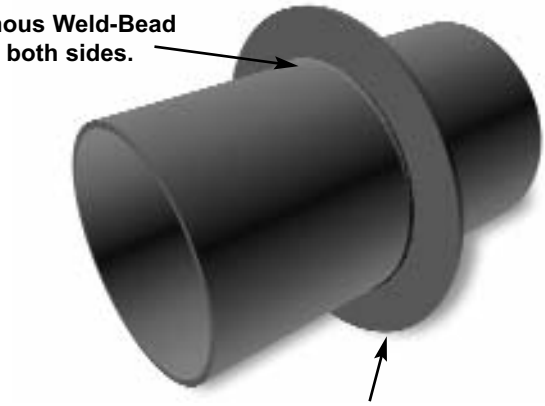

Model WS (12" length)

MODEL	I.D.	lbs.	Kg.
WS-2-21-S-12	1.94	5.90	2.67
WS-2-15-S-12	2.07	5.53	2.51
WS-2-1/2-27-S-12	2.32	9.78	4.43
WS-2-1/2-20-S-12	2.47	7.91	3.58
WS-3-30-S-12	2.90	12.60	5.71
WS-3-21-S-12	3.07	9.93	4.51
WS-3-1/2-22-S-12	3.55	11.70	5.31
WS-4-23-S-12	4.03	13.61	6.17
WS-5-25-S-12	5.05	17.91	8.12
WS-6-28-S-12	6.07	22.73	10.31
WS-6-18-S-12	6.25	14.82	6.72
WS-8-32-S-12	7.98	33.55	15.22
WS-8-18-S-12	8.25	21.94	9.95
WS-10-36-S-12	10.02	46.12	20.92
WS-10-25-S-12	10.25	33.67	15.27
WS-12-37-S-12	12.00	60.14	27.28
WS-14-37-S-12	13.25	62.04	28.14
WS-16-37-S-12	15.25	71.04	32.22
WS-18-37-S-12	17.25	79.98	36.28
WS-20-37-S-12	19.25	90.00	40.82
WS-22-37-S-12	21.25	98.00	44.45
WS-24-37-S-12	23.25	107.00	48.53

WS Steel Wall Sleeve Specification

Provide WS Steel sleeves for all pipes passing through concrete or masonary structures. The WS Sleeves shall be provided free of welding slag. WS Steel Sleeve sizes though 10" shall be Schedule 40 Steel Pipe or standard wall thickness. WS Steel Sleeve sizes 12" and larger shall have a .375" or standard wall thickness. WS Sleeves through wall shall be cast in place and the pipe shall be installed centered in sleeve. The 2" collar, (water-stop) shall be the same type of steel as the WS sleeve. The collar shall be welded all around on both sides to the sleeve at the point on the sleeve that positions it at the mid-point of the structural wall when the sleeve is in place. The WS Steel Sleeve w/water-stop shall be primed inside and outside with Rust-o-Leum red primer #5268 or approved equivalent.

Pipeline Seal and Insulator, Inc., Houston, Texas, U.S.A shall provide WS Steel Sleeves.

LOCAL LINK-SEAL® MODULAR SEAL REPRESENTATIVE

Commercial Equipment Enterprise, Inc.
3137 Highway 36, North
Sealy, Texas 77474
Tel: 979-627-7272 Fax: 979-627-7226
www.cee-cee.com

VISIT WWW.CEE-CEE.COM FOR LITERATURE & INSTALLATION TECHNIQUES

©2008, Pipeline Seal & Insulator, Inc.

WS Split Steel Wall Sleeves

WS Split Wall Sleeves are constructed from steel and are available in a wide range of diameters.
They are an excellent choice for installations where the application has an existing pipe and requires a sealing penetration.

A = 12”

B = 3”

C = 6”

D = 3”

E = 1/8”

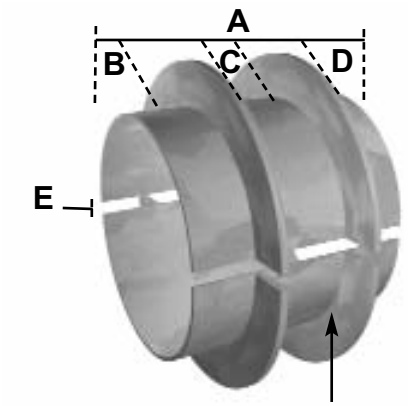

Continuos Weld-Bead on both sides.

Model WS Spit Sleeves (12” length)

MODEL	I.D.
WS-2-15-S-12DWS	2.07
WS-2-1/2-27-S-12DWS	2.47
WS-3-21-S-12DWS	3.07
WS-3-1/2-22-S-12DWS	3.55
WS-4-23-S-12DWS	4.03
WS-5-25-S-12DWS	5.05
WS-6-28-S-12DWS	6.07
WS-8-32-S-12DWS	7.98
WS-10-36-S-12DWS	10.02
WS-12-37-S-12DWS	12.00
WS-14-37-S-12DWS	13.25
WS-16-37-S-12DWS	15.25
WS-18-37-S-12DWS	17.25
WS-20-37-S-12DWS	19.25
WS-22-37-S-12DWS	21.25
WS-24-37-S-12DWS	23.25
WS-26-37-S-12DWS	25.25
WS-28-37-S-12DWS	27.25
WS-30-37-S-12DWS	29.25

WS Split Steel Wall Sleeve - Specification

Provide WS Split Steel sleeves for all pipes passing through existing concrete or masonry structures. WS Split Steel sleeve sizes shall be provided free of welding slag. The sleeve shall be furnished with two - (2”) water-stop collars of the same material as the WS split sleeve. The collar collars shall be welded all around on both sides to the sleeve. WS Split Steel Sleeve sizes though 10” shall be Schedule 40 Steel Pipe or standard wall thickness. WS Split Steel Sleeve sizes 12” and larger shall have a .375” or standard wall thickness.

The WS Split Steel Sleeve shall be primed inside and outside with Rust-o-Leum red primer #5268 or approved equivalent.

Pipeline Seal and Insulator, Inc., Houston, Texas, U.S.A shall provide WS Split Steel Sleeves.

WS Split Steel Wall Sleeve - Important Notes

Made to order - may not be returned or exchanged.

Model WS Split Sleeves furnished Galvanized shall be galvanized after all welding, cutting, and cleaning has been completed.

E Measurement must always be 1/8” for welding purposes.

Model Number - **DWS** = Double Water-Stop Split Sleeve.

LOCAL LINK-SEAL® MODULAR SEAL REPRESENTATIVE

Commercial Equipment Enterprise, Inc.
3137 Highway 36, North
Sealy, Texas 77474
Tel: 979-627-7272 Fax: 979-627-7226
www.cee-cee.com

VISIT WWW.CEE-CEE.COM FOR LITERATURE & INSTALLATION TECHNIQUES

©2008, Pipeline Seal & Insulator, Inc.

WS Intermediate Steel Wall Sleeves

WS Intermediate Wall Sleeves are constructed from steel and are available in a wide range of diameters. They are an excellent choice for installations where the application requires two belts of Link-Seal® modular seals to fill the annular space.

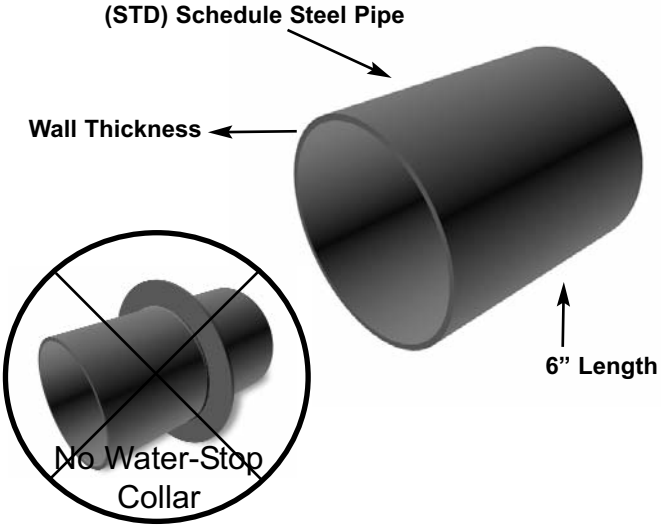

Model WS Intermediate Sleeves (6" length)

MODEL	I.D.	lbs.	Kg.
WS-2-15-S-6NW	2.07	1.83	0.83
WS-2-1/2-27-S-6NW	2.47	2.90	1.31
WS-3-21-S-6NW	3.07	3.79	1.72
WS-3-1/2-22-S-6NW	3.55	4.55	2.07
WS-4-23-S-6NW	4.03	5.40	2.45
WS-5-25-S-6NW	5.05	7.31	3.32
WS-6-28-S-6NW	6.07	9.49	4.30
WS-8-32-S-6NW	7.98	14.28	6.48
WS-10-36-S-6NW	10.02	20.24	9.18
WS-12-37-S-6NW	12.00	24.78	11.24
WS-14-37-S-6NW	13.25	27.29	12.38
WS-16-37-S-6NW	15.25	31.29	14.20
WS-18-37-S-6NW	17.25	35.30	16.01
WS-20-37-S-6NW	19.25	39.30	17.83
WS-22-37-S-6NW	21.25	43.30	19.64
WS-24-37-S-6NW	23.25	47.31	21.47
WS-26-37-S-6NW	25.25	51.30	23.28
WS-28-37-S-6NW	27.25	55.30	25.09
WS-30-37-S-6NW	29.25	59.30	26.91

Note: Intermediate Sleeves are 6" in length, with no welded water-stop collar.
NW = No Water-Stop Collar

WS Intermediate Steel Wall Sleeve - Specification

Provide WS Intermediate Steel sleeves for all pipes passing through concrete or masonary structures that require two belts to seal a large annular space. WS Intermediate steel sleeve sizes shall be (STD) standard wall thickness or .375". The WS Intermediate Steel Sleeve shall be primed inside and outside with Rust-o-Leum red primer #5268 or approved equivalent.

Pipeline Seal and Insulator, Inc., Houston, Texas, U.S.A shall provide WS Steel Sleeves.

WS Intermediate Steel Wall Sleeve - Installation

Follow the standard published Link-Seal® modular seal installation techniques. These can be found in the Engineering Manual (Page 22) Selection Guide (Page 8) or the Pocket Guide (Page 22).

When installing an intermediate sleeve, use the following supplementary steps.

1) Slide intermediate sleeve over centered pipe.
2) Slide **inner** belt assembly into annular space.
3) Slide **outter** belt assembly into annular space.
4) Tighten **outter** belt first, then proceed to tightening the **inner** belt.

LOCAL LINK-SEAL® MODULAR SEAL REPRESENTATIVE

Commercial Equipment Enterprise, Inc.
3137 Highway 36, North
Sealy, Texas 77474
Tel: 979-627-7272 Fax: 979-627-7226
www.cee-cee.com

VISIT WWW.CEE-CEE.COM FOR LITERATURE & INSTALLATION TECHNIQUES

©2008, Pipeline Seal & Insulator, Inc.